Bourdon Tube Pressure Gauges
Stainless Steel Series
Model MBS

Applications

- chemical/petro-chemical industry
- hydraulics system
- compressors
- wind power industry
- shipping industry

Special Features

- special process connection for various application
- special oil filling reach requirement of ambient temperature - 40 °C
- combined with various chemical seals for difference application
- Max. scale range reach 1600bar
- various throttles against shocking and vibration

We have all right reserved for this document © DMASS GmbH
wir uns fuer dises unterlogo alle Rechte vor

Technical data

Design	**Pressure application**
EN 837-1	permanent loading: NS 63: 3/4 xfull scale range NS 100: full scale range
Nominal size in mm	dynamic loading: NS 63: 2/3 xfull scale range NS 100: 0.9xfull scale range
63,100	overpressure protection: NS 63: full scale range NS 100: 1.3xfull scale range
Accuracy class	**Ingress protection**
NS 63: 1.6% NS 100: 1.0%	IP 65 per EN 60 529 / IEC 529
Scale ranges	**Operating temperature**
0...0.6 to 0...1000 bar vacuum pressure is available	Ambient: -25 ... +60 °C Medium: +60 °C maximum

D-LK-09E-001

DMASS GmbH
Lurgiallee 6- 8
D-60439 Frankfurt/Main
Germany

Tel:+49-69-50699231
Fax:+49-69-50699233
www.dmass-technik.com
e-mail:info@dmass-technik.com

Case	Measuring element
st.st.1.4301,with pressure relief@ the position of 12 o'clock Ranges ≤ 0/16 bar with compensating valve-position 12 o'clock	NS 63: < 60 bar: st.st., C-type ≥ 60 bar: st.st., helical type
Bezel ring	NS 100: < 100 bar: st.st., C-type ≥ 100 bar: st.st., helical type
stainless steel, flat bezel	
Window	**Movement**
NS 63: plastic NS 100: Laminated safety glass	stainless steel
Dial	**Process connection**
Aluminium,white	stainless steel lower mount or back mount NS 63: G ¼ B (male), 14 mm flats NS 100: G ½ B (male), 22 mm flats
Pointer	
Aluminium,black	

Dimensions in mm

Lower mount (LM)

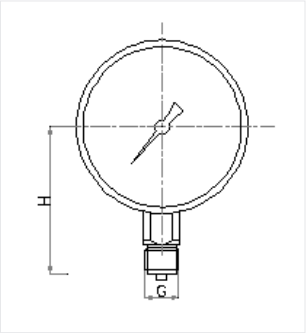

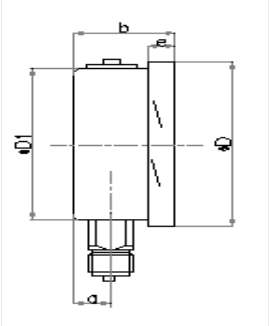

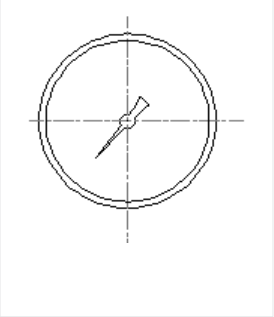

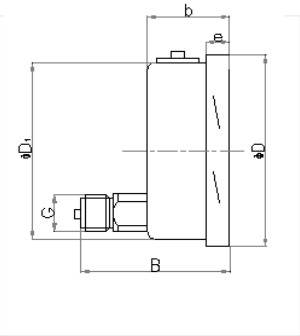

ND	H	a	b	B	D	G	SW
63	54	13.5	32.5	56.5	63	G ¼ B	14
100	87	15.5	48.5	82	101	G ½ B	22

We have all right reserved for this document © DMASS GmbH
wir uns fuer dises unterlogo alle Rechte vor

D-LK-09E-001

DMASS GmbH
Lurgiallee 6- 8
D-60439 Frankfurt/Main
Germany

Tel:+49-69-50699231
Fax:+49-69-50699233
www.dmass-technik.com
e-mail:info@dmass-technik.com